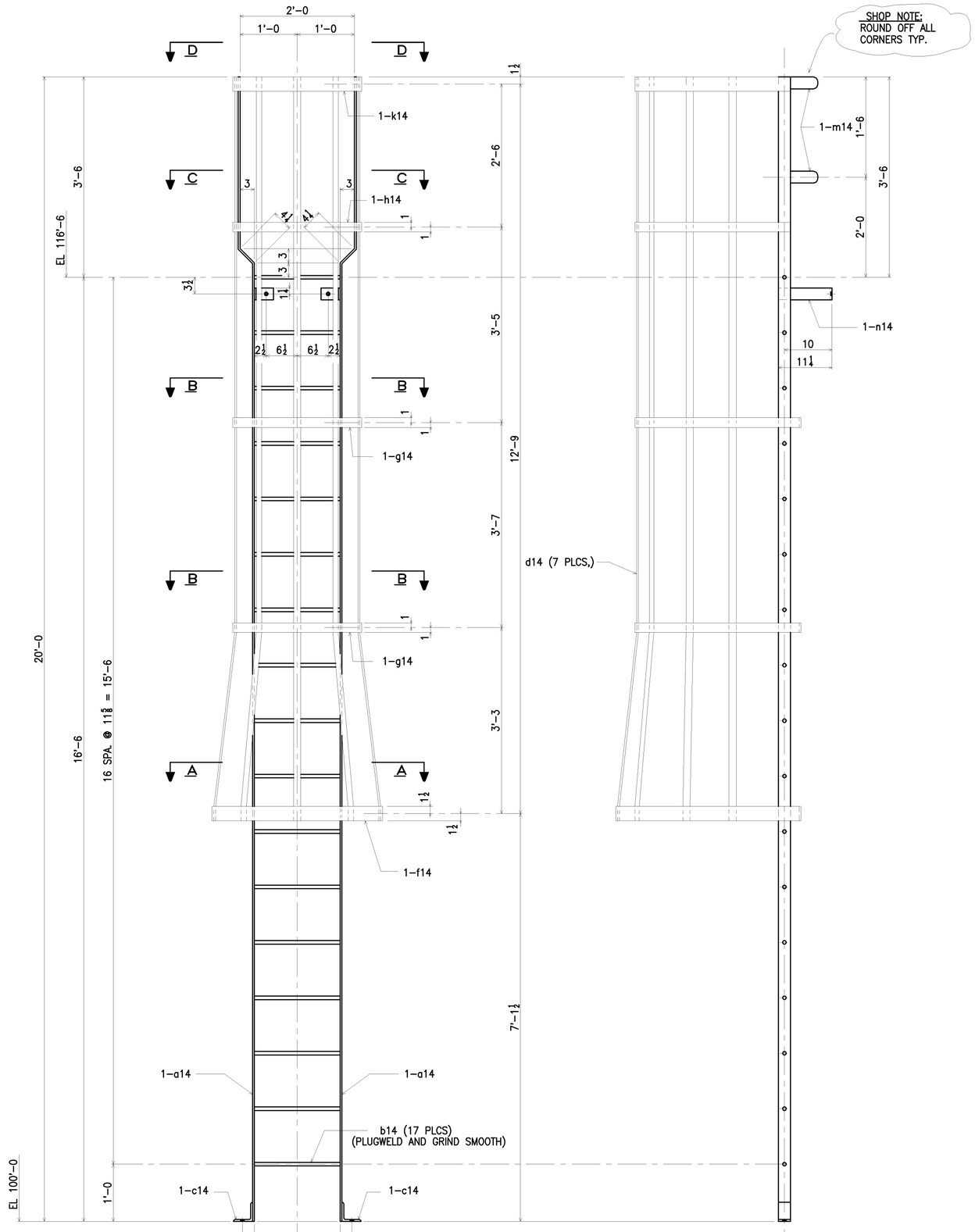

ONE – LADDER – MARK "14L1"

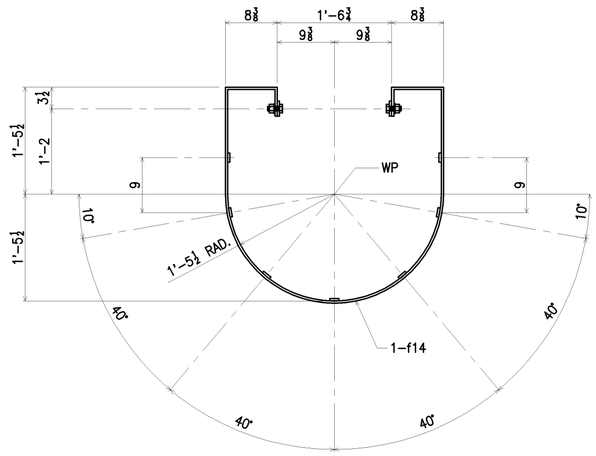

SECTION A–A

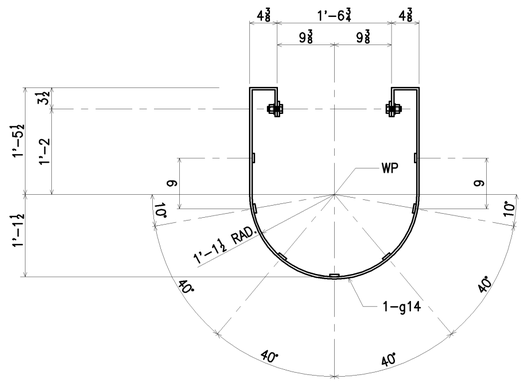

SECTION B–B

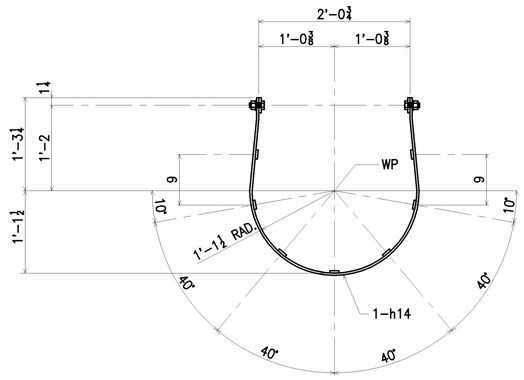

SECTION C–C

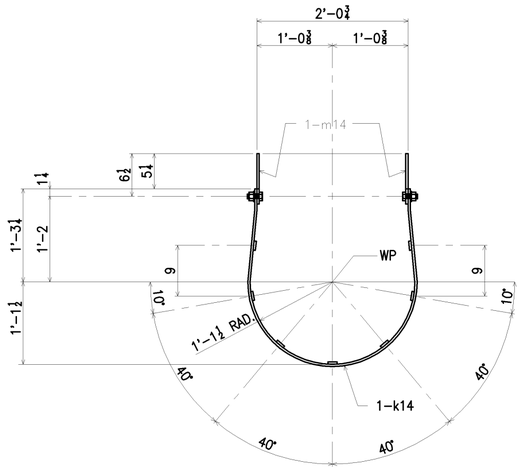

SECTION D–D

QUAN	MARK	SHAPE	LENGTH	REMARKS	ITEMS
ONE	14L1	LADDER			
2	a14	PL ⅜ x 2½	20'-1¼	BENT	
17	b14	Rod ¾ø	1'-6½		
2	c14	L 4 x 4 x ⅜	2½		
7	d14	PL ¼ x 1½	12'-10½		
1	f14	PL ¼ x 3	9'-6¼	ROLLED BENT	
2	g14	PL ¼ x 2	7'-9⅜	ROLLED BENT	
1	h14	PL ¼ x 2	6'-0 15/16	ROLLED	
1	k14	PL ¼ x 3	6'-0 15/16	ROLLED	
4	m14	PL ⅜ x 2½	5¼		
2	n14	PL ⅜ x 2½	1'-2½	BENT	
10		¾"ø A325	1¾		

GENERAL NOTES:

MATERIAL – ASTM A36 U.N.O.
TUBING – ASTM A500, GR. B
PIPE – ASTM A53, GR. B
BOLTS – ¾ø A325 U.N.O.
HOLES – 13/16"ø U.N.O.
WELD – E70xx ELECTRODES (LOW HYDROGEN FOR GRADE 50 STEEL)
PAINT – AS PER SPECS (EXCLUDE PAINT ON NON–FERR. MAT'L)
SURFACE PREP – SSPC–SP 2

QUAN.	FIELD BOLTS
2	⅝"ø EXP. BOLT

QUAN.	DIST.	DATE
PRINT RECORD		

REV #	DATE	DESCRIPTION	INIT.
REVISIONS			

SKITCO IRON WORKS
HAZLETON, PA. (570) 929–2100

JOB NAME: HUNTER PANEL LLC
LOCATION: UNIONTOWN PA
CUSTOMER: R.E.C.
DESIGNER: ARSA/ANDERSEN & FIENE, LTD.
DWG. BY: J.B.LONG, INC ARS 06–02 | JOB NO. 5028 | DWG. NO. 14
DATE: MS | CHK'D: 1/27/06

14