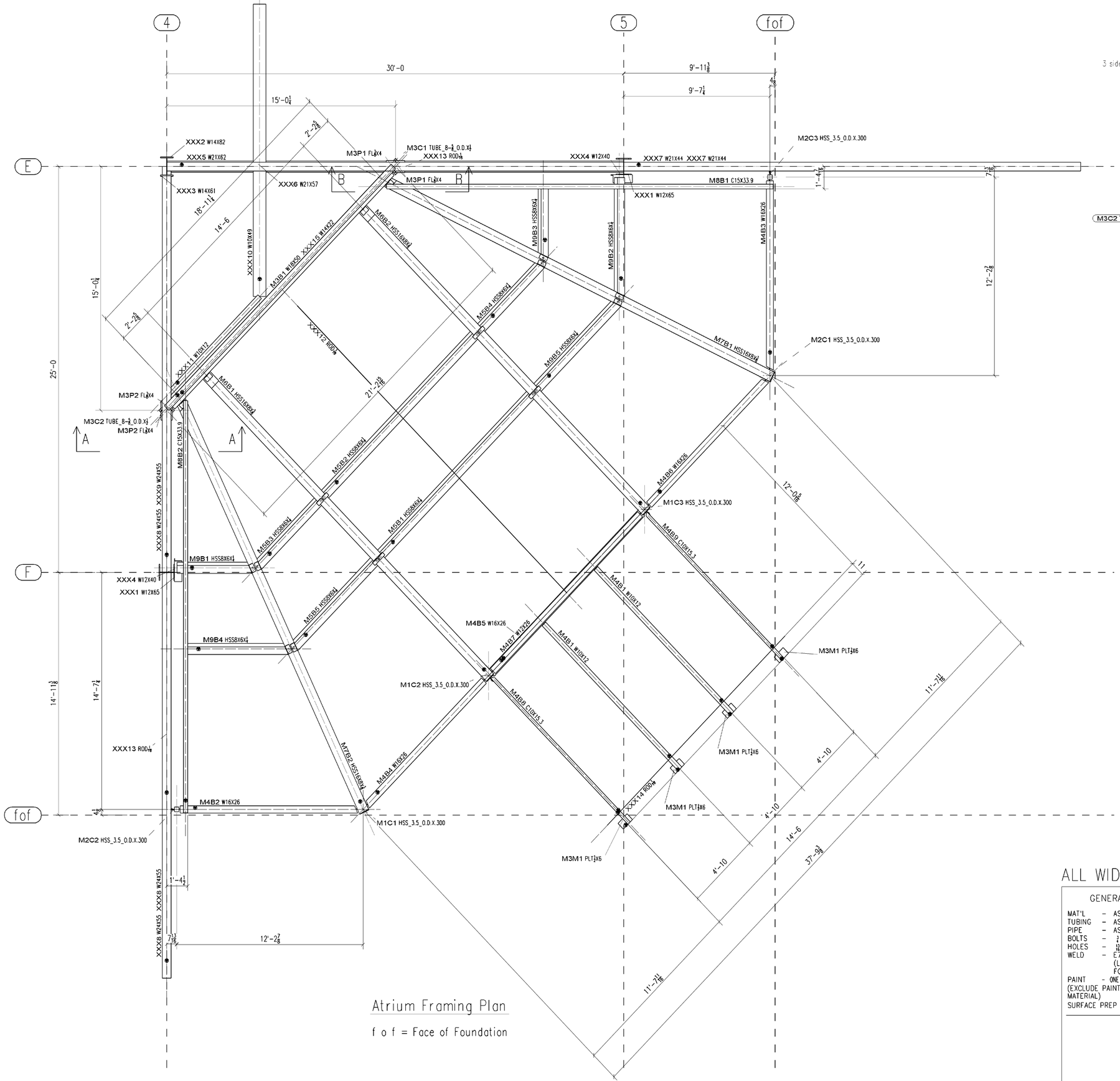

Atrium Framing Plan

f o f = Face of Foundation

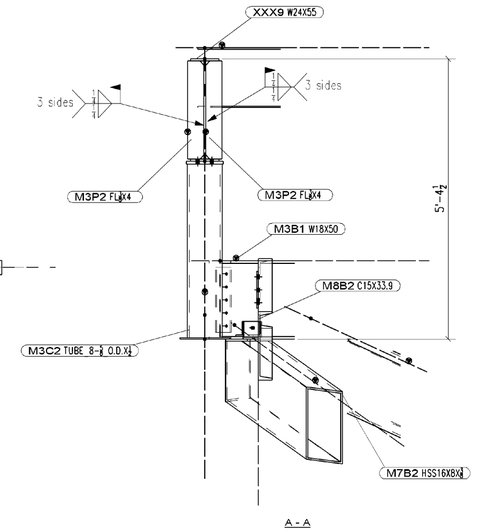

A - A

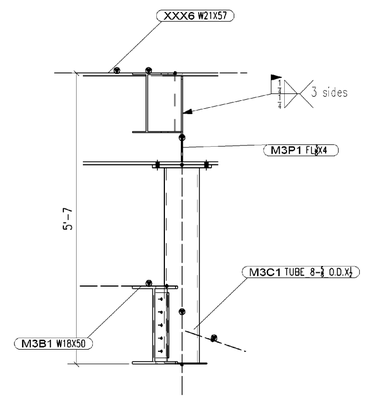

B - B

SZOKE BROTHERS, INC.

STRUCTURAL STEEL & MISC.IRON—FABRICATION & ERECTION

8649 PAINT MILL ROAD,SLATINGTON,PA 18080 (610) 760-0588 FAX(610) 760-9066

ALL WIDE FLANGE MAT'L TO BE ASTM A992 GR.50

GENERAL NOTES:

MAT'L - ASTM A36 U.N.O.
TUBING - ASTM A500, GR B
PIPE - ASTM A53, GR B
BOLTS - 3/4" DIA. A325-SC
HOLES - 13/16" DIA. U.N.O.
WELD - E70XX ELECTRODES (LOW HYDROGEN FOR GRADE 50 STEEL)
PAINT - ONE SHOP COAT STD. PRIMER U.N.O. (EXCLUDE PAINT ON GALV.&NON-FERP. MATERIAL)
SURFACE PREP - SSPC-SP 2

QUAN	DISTRIBUTION	DATE	#	DISTRIBUTION	DATE
PRINT RECORD			REVISIONS		

JOB NAME: CROWN POINTE - ATRIUM FRAMING
LOCATION: BETHLEHEM TOWNSHIP, PA
CUSTOMER: NORTH STAR CONSTRUCTION MANAGEMENT, INC.
DESIGNER: D. SCOTT BIGLEY, P.E.

DRAWN BY: J.B.LONG,INC JIM 02-54 CHECKED BY: JBL 9/2/03 DATE: 9/2/03

JOB# 1408 DRAWING# ME2 0